HOUSEMATE™
STEAM VACUUM EXTRACTOR

Top Innovations, Inc.
Innovative Products to Make Your Life Easier

HouseMate™ Steam Vacuum Cleaner
Model SF-850
Owner's Manual

- 5-in-1 Cleaning System: Steam, Vacuum, Blow, Extract, and Dispenser.
- Melt Away Grease, Grime, and So Much More!
- The Latest Technology in Steam Vacuum Cleaner System

Top Innovations, Inc.
400 NW Platte Valley Drive, Riverside, MO 64150
1-800-711-6617 Tel: 816-584-9700 Fax: 816-584-9066
www.topinnovations.com

HOUSEMATE™
STEAM VACUUM EXTRACTOR

LETTER FROM THE CEO

Congratulations on purchasing your **HouseMate™**. We hope it can make your cleaning experience faster and easier.

Top Innovations, Inc. takes pride in providing excellent quality products, affordable prices, and outstanding customer support.

We invite you to visit us at www.topinnovations.com or call (800) 711 6617 ext: 102 and/or 130. Our customer support team is available to answer any questions you may have about your new product.

Enjoy your **HouseMate™**!

Benny Lee
Chairman and CEO
Top Innovations, Inc.

IMPORTANT SAFETY GUIDELINES

Basic safety precautions should be used when using any electrical appliance.

WARNING: In order to reduce the risk of fire, electric shock, or other injuries, please read all of the following instructions before using your SF-850 HouseMate™ Steam Vacuum Cleaner.

1. Do not leave the appliance unattended when plugged in. Always unplug the electrical cord when the unit is not in use.

2. **This unit is not a toy. Close supervision is required when using the unit near children, pets, and plants. The steam produced by the unit is hot and pressurized. Care must be taken to avoid burns or other injuries. Never point the nozzle at pets or people.**

3. Do not use the unit if it is not working properly or has been dropped, damaged, or left outdoors. If such damage occurs, return the unit to an approved service technician for repair.

4. Do not expose this appliance to rain. Store indoor only and do not store in temperature below freezing.

5. Do not use this unit with electrical cords or outlets that have inadequate current capacity. A three-prong outlet or a properly grounded adapter is necessary when using the SF-850 HouseMate™ Steam Vacuum Cleaner.

6. In order to unplug the SF-850, grasp the plug and pull smoothly and firmly from outlet. Do not attempt to unplug the unit by pulling or tugging on the cord.

7. Do not handle or use this unit while hands are wet or when not wearing shoes. To avoid falls and other injuries, be sure to dry any wet areas on floors and to stand away from damp surfaces while using the HouseMate™ Steam Vacuum Cleaner.

SAVE THESE INSTRUCTIONS!

IMPORTANT SAFETY GUIDELINES

Basic safety precautions should be used when using any electrical appliance.

WARNING: In order to reduce the risk of fire, electric shock, or other injuries, please read all of the following instructions before using your SF-850 HouseMate™ Steam Vacuum Cleaner.

8. Use only as describe in this manual. Use only manufacture's recommended attachments.

9. Nozzles and attachments become hot during use. To avoid injuries, do not touch nozzles while using this appliance. Do not attempt to change attachments while the steam control button is depressed.

10. Do not put any object into the suction intake opening that would block it. Do not use with any opening or air intake area blocked. Keep free of dust, lint, hair and anything else that may reduce the airflow.

11. Keep hair, loose clothing, fingers, and all body parts away from openings and moving parts.

12. Do not vacuum anything that is burning or smoking, such as cigarettes, matches, or hot ashes.

13. Do not use to pick up flammable or combustible liquids such as gasoline or use in areas where they may be present.

14. Keep the end of hose wands and other openings away from your face and body.

15. Do not use the vacuum cleaner without filter in place.

16. Using improper voltage may result in damage to the motor and possible injury to the user. Correct voltage is listed on the rating label.

17. Do not use for any purpose other than described in this user's guide.

SAVE THESE INSTRUCTIONS!

HouseMate™ Steam Vacuum Cleaner: Product Information

1. Water Tank
2. Float Assembly
3. Main Switch
4. Lucks Effect Assembly
5. Water Tank Cover
6. Control Panel
7. Intake Hole (Hose)
8. Boiler Cap
9. AC Power Cord
10. Vacuum On/Off Button
11. Steam On/Off Button
12. Low Water Light Indicator
13. Steam Ready Light Indicator
14. Vacuum Power Button (Increase Suction)
15. Vacuum Power Button (Decrease Suction)
16. Steam Volume Button (Steam Control)
17. Drain Plug for Boiler Decalcification
18. Polyester Filter
19. Filter Cover

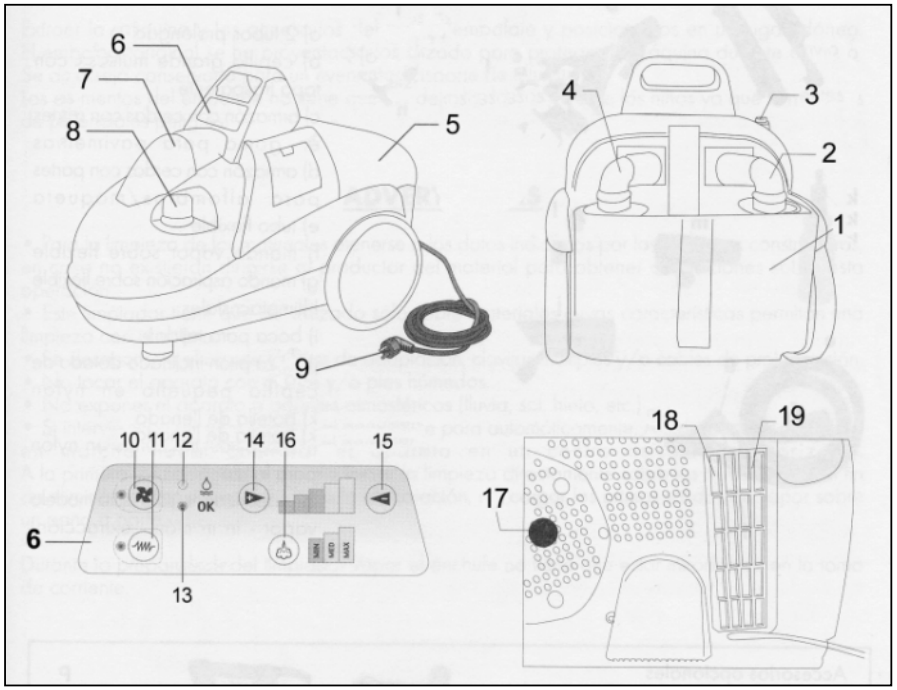

HouseMate™ Steam Vacuum Cleaner: Product Information

Your SF-850 package includes the following features and accessories:

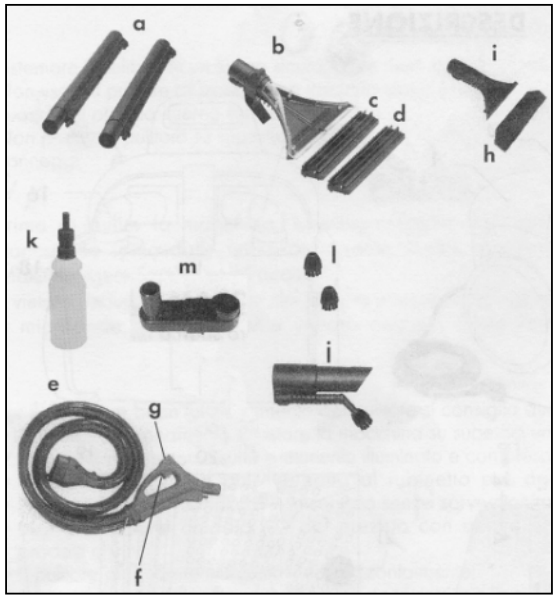

Parts Included:

- **A.** 2 Extension Wands
- **B.** Multipurpose Floor Brush
- **C.** Bristled Frame with Rubber Lip Attachments for Hard Floor
- **D.** Bristled Frame with Rubber Lip Attachments for Loose/Fitted Carpets
- **E.** Hose
- **F.** Steam On/Off Button
- **G.** Vacuum On/Off Button
- **H.** Squeegee
- **I.** Textiles Tool
- **J.** Nozzle with Curved end Piece with Small Nylon Brush
- **K.** Fill Water Bottle
- **L.** 2 Small Brushes
- **M.** Blower

Packaging

Important: Remove the appliance and the accessories from the packaging and put them in an appropriate place.
The original packaging has been designed to protect the appliance during shipment. We suggest you keep the packaging for any future use. Please keep the unit, appliances, and accessories out of children's reach to avoid injures.

Using Your HouseMate™

WARNING: Before filling boiler with water, be sure power is off and unit has completely cooled down.

- Fill the bottle (K) with Distillated or Tap Water.
- Apply downward pressure to the boiler cap (8) and unscrew by turning it anticlockwise; Fig 2.
- Turn the fill water bottle (K) upside down on the boiler opening and apply downward pressure on the bottle to fill the boiler; Fig 2.
- Screw back the boiler cap (8) by turning it clockwise while simultaneously applying downward pressure; ensure the boiler cap is securely tight.
- Remove the water tank cover (5), fill the water tank (1) with 34 ounces of tap water and lock the cover back into locked position. This operation will ensure that the air is filtered and any impurities (Dust, Mites, etc.) are trapped. For proper use, do not exceed the "Minimum" water level shown on the tank. Fig 3.
- Plug the A/C power cord into a three prong electrical outlet.

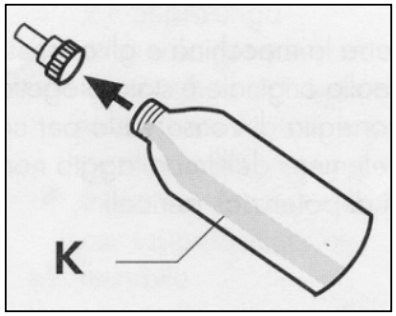

Fig. 1

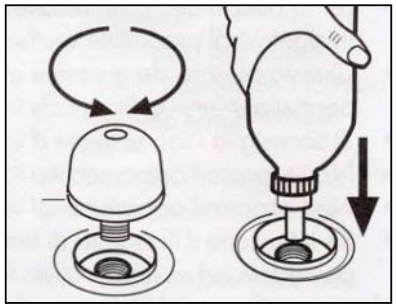
Fig. 2

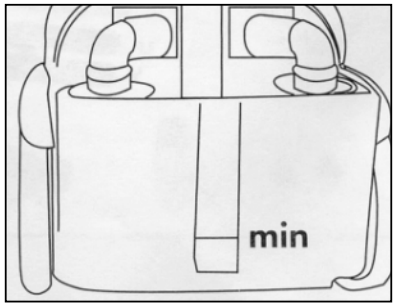

Fig. 3

Connecting the Accessories

WARNING: Failure to secure the accessories using the clasp provided can pose a hazard; the accessories can suddenly come off while the machine is in use.

The accessories can be connected directly to the handle of the work hose (E) or to the extension wands (A), when so required. To secure the accessories to each other, simply fit the male end of one into the female end of the other and rotate the locking clasp. Fig 4.

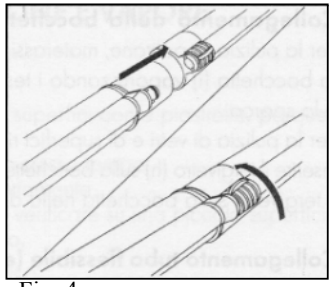
Fig. 4

All the following functions can be used with any one of the accessories provided:

- Steam Functions
- Vacuum Functions
- Simultaneous Vacuum and Steam Functions

To remove the accessories:

- Stop the steam function by releasing the steam on/off button (F) on the handle of the work hose (E)
- Stop the vacuum function by releasing the vacuum on/off button (G) on the handle of the work hose (E)
- Rotate the accessories locking clasp. Fig. 4. Now, you can disconnect the accessories.
- Connecting the bristled frames to the brush (B). Two different types of frames can be attached to the large multifunction brush to clean and care for all surfaces:
- Bristled frame with rubber lip attachments (C), suitable for hard surfaces, for best steam collection.
- Bristled frame with attachments (D) suitable for loose and fitted carpets, etc…
- To change frames (C-D) simply slide the frames in or out in the direction shown in the illustration. Fig. 5.
- Connecting the nozzle (J) and small brushes (L)

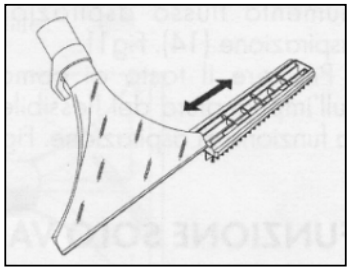
Fig. 5

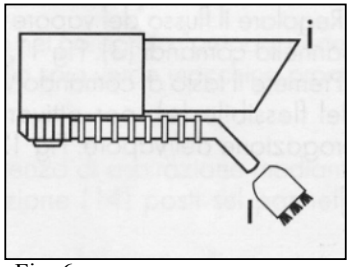

Fig. 6

The nozzle is especially suitable for the cleaning of:

- Radiators, Sinks, Toilets, Showers Walls, Tiles, and carpet stains.

Connecting the textiles tool (H) and Squeegee (I)

- To clean armchairs, mattresses, and fabric surfaces, use the textile tool (H), using the steam function and then the vacuum function to vacuum up the steam and dirt. For the cleaning of glass and small hard surfaces, attach the squeegee (I) on the tool. Fig. 7, by sliding the squeegee on the tool.

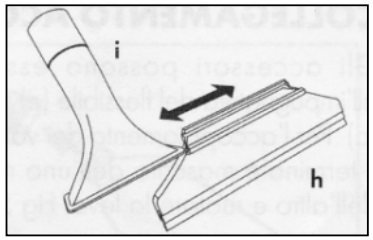

Fig. 7

Connecting the hose (E)

- Flip the accessory socket door (7) wide open and fit the quick connection of the hose (E) to the socket on the front of the appliance. Press the connection in as far as it will go.
- Close the accessory socket door (7) so that is rests on the body of the quick connection and check that the two elements are properly engaged. Fig. 8

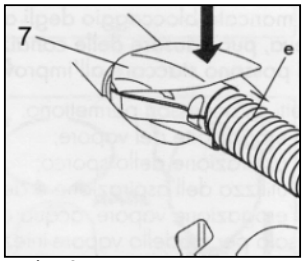

Fig. 8

Vacuum Cleaning Alone

- 5ch on the machine at the main switch (3) and push vacuum On/Off button (10). Fig. 9-10
- Adjust the vacuum suction on the panel control with buttons (14) (15) (Increase/Decrease vacuum suction) Fig. 10
- Push the vacuum function control button (G) on the handle of the work hose (E) to activate or deactivate the vacuum function. Fig 11

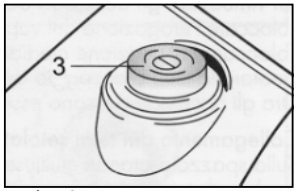

Fig. 9

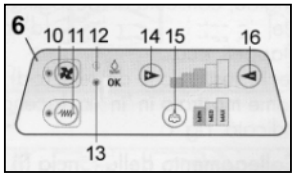

Fig. 10

Steam Cleaning Alone

- Switch On button on the machine at the main switch (3) and push the steam heating button (11). Once the ready light (13) illuminates, the steam is ready to use. Fig. 10
- Adjust the steam volume via the button (15) on the control panel (6). Fig 10
- Push the steam On/Off button (F) on the handle of the work hose (E), to activate or deactivate the steam function. Fig 11

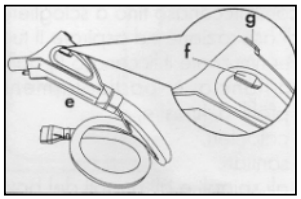

Fig. 11

Simultaneous Vacuum and Steam Functions

Note: With the multipurpose brush, you can clean and care for nearly all surfaces, such as tiles, parquet, PVC, stone floors linoleum, rugs, and carpets. With rugs and carpets, the pile is both straightened a new and cleaned. With rough floors, dirt is cleaned out of the depths and then vacuumed up. Sensitive materials (such as wool, velour, or waxed surfaces) absolutely must be tested for heat resistance in order to avoid damage.

Blower Function

With the Blower Function, air is blown out of the machine allowing you to perform such tasks as blowing fallen leaves in the garden and removing dust from areas where the accessories cannot reach.

How to Use:

- Remove the water tank and cover (1+2) from the back of the unit. Fig 12.
- Remove the blower function cap. Fig. 13
- Connect the blower (M) into the intake hole; push it in as far as it will go until snug. Fig. 14
- Turn Main Switch (3) on and push the vacuum function button (10).
- Adjust the vacuum suction on the panel control with buttons (14) (15) (Increase/Decrease vacuum suction)
- Push the vacuum function control button (G) on the handle of the work hose (E) to activate or deactivate the blowing function, the use of the hose (E) with nozzle (J) is recommended. Fig 15.

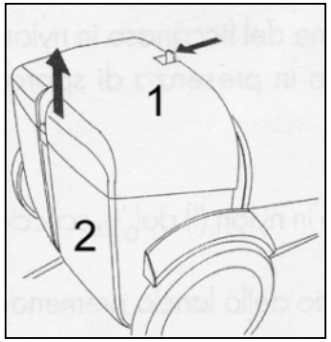

Fig. 12

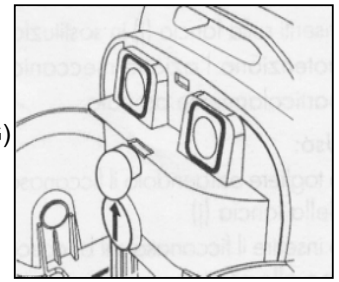
Fig. 13

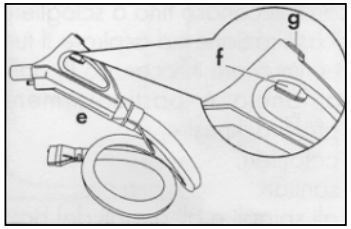

Fig.15

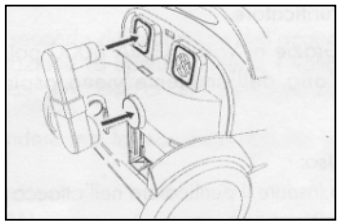
Fig. 14

Maintenance of the Machine and Accessories

When performing any maintenance on the SF-850, please turn off the unit and unplug the AC cord from the electrical outlet.

The **HouseMate™** is a very tough machine and requires only very little maintenance. However, in order to avoid dirt buildup in the wands (A), hoses (E), accessory components, and dirty water tank (1-5) it is important to clean the machine after use.
To do so, turn on the vacuum function and simply vacuum up cleaner clean tap water through the parts that have been used. Empty the drawn-in water out of the water tank (1) and rinse out the tank with clear water.
The water tank (1), float assembly (2) and the "Lucks effect" assembly (4), are located inside the water tank (1). They can be removed from their seats in order to be cleaned. Fig. 15

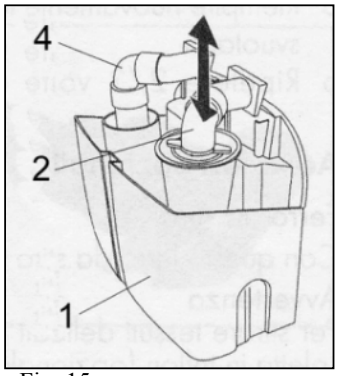

Fig. 15

You should clean the O rings on the accessories at regular intervals.

Clean the vacuum filter (18) at regular intervals. To do so, disengage the filter cover (19), fig. 16. Shake the filter and wash it with clean water if necessary. Reposition the filter in its seat and refit the filter cover (19).

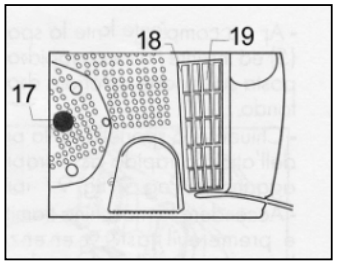

Fig. 16

In the event that the machine is not used for a long period of time, we recommend emptying completely the machine and the boiler by unscrewing the drain plug (17) (This is located on the bottom of the machine) Fig 17.

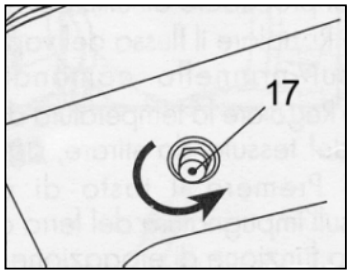

Fig. 17

Cleaning the Appliance

Before cleaning the appliance, you must turn off the main switch and then pull the plug out of the electrical outlet and allow the machine to cool down.
Never plunge the steam vacuum cleaner in water!
Do not to dry any part of the steam vacuum cleaner in conventional and/or microwave ovens. Do not service the inner parts of the machine.

Appliance Care

After each use, turn all switches off, pull the plug out of the electrical outlet and empty the waste water tank.
Keep the machine in dry place, away from children's reach.
Keep the machine away from dust and dirt.

Where to Keep or Use the Appliance

Place the steam vacuum cleaner in a safe place where no one can knock it over and where no one can be harmed.
Do not use the steam vacuum cleaner in the open air; never leave it in areas where temperatures are lower or equivalent to 32°F, especially when the cleaner has water in it.
Do not place the steam vacuum cleaner on hot surfaces or close to open flames, as this will bring damage to the appliance.

Repair/Maintenance

In case of malfunction, defects, or suspected defects after a fall, pull the plug out of the socket. Do not start defective machine!
Only authorized service centers are allowed to service or repair the appliance. The manufacturer disclaims any responsibility for any damage and/or injury that may result in the event of service that is carried out in breach of the applicable safety regulations or is executed by unauthorized personnel.

Customer Support

Contact our Customer Support Team at Top Innovations, Inc. at 1-800-711-6617 or 1-816-584-9700. E-mail us at customerservice@topinnovations.com or visit our web site at www.topinnovations.com

To enable us to better assist you, please have Model and Serial numbers on hand when contacting our Customer Support Team.

Top Innovations, Inc.

ONE YEAR LIMITED WARRANTY

(If outside USA, additional shipping charges may apply)

Top Innovations, Inc. warrants this product to be free from defects in material and workmanship for a period of one (1) year from the date of purchase. This warranty does not cover damage caused by misuse, negligence, use by improper current or voltage, use contrary to operating instructions or disassembly, repair or alteration by any person other than Top Innovations, Inc. Warranty Service Department.

Top Innovations, Inc. will repair or replace, at its option. This warranty gives you specific legal rights and may have other rights, which may vary from state to state.

Performance of any obligation under this warranty may be obtained by:

1. **Call before sending for return authorization (800) 711-6617**
2. **Include copy of purchase receipt**
3. **Do not forget to include your name, address and telephone number**

Please send product postage prepaid to:

TOP INNOVATIONS, INC.
WARRANTY SERVICE DEPARTMENT
400 NW PLATTE VALLEY DR.
RIVERSIDE, MO 64150

If after 1 year limited warranty has expired, you will be advised of the cost of repair before any servicing is done unless you enclose a note indicating that you would like us to proceed with repairs.

If you have any questions about coverage under this warranty, you may contact warranty service department by telephone at (800) 711-6617 or email cusomerservice@topinnovations.com

Notes

HOUSEMATE™
STEAM VACUUM EXTRACTOR

Printed in China

Top Innovations, Inc.
400 NW Platte Valley Drive, Riverside, MO 64150
1-800-711-6617 Tel: 816-584-9700 Fax: 816-584-9066
www.topinnovations.com